COMPRESSOR TECHNICAL DATA

NEK6165U

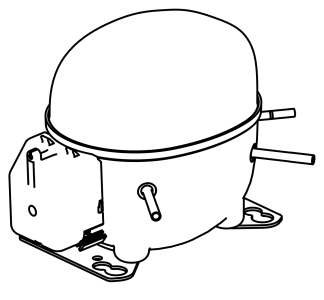

ENGINEERING CODE
861EA51

REFRIGERANT
R-290

POWER SUPPLY
220-240 V 50 Hz

APPLICATION
HBP

MOTOR TYPE
CSIR

STANDARD
ASHRAE

COOLING CAPACITY
845 W

EFFICIENCY
2.45 W/W

DATA

GENERAL DATA

Model	NEK6165U
Type	Hermetic Reciprocating
Technology	ON/OFF
Compressor Application	HBP
Expansion Device	Capillary Tube or Expansion Valve
Compressor Cooling	Fan/220
HP	1/3-
Starting Torque	HST
Plant	SLOVAKIA

ELECTRICAL DATA

Start Winding Resistance	28.2 Ω at 25°C
Run Winding Resistance	6.1 Ω at 25°C

MECHANICAL DATA

Displacement	6.2 cm^3
Oil Charge	350 ml
Oil Type	ESTER
Oil Viscosity	ISO22
Weight	10.4 Kg

ELECTRICAL COMPONENTS

Start Capacitor	43-53 µf/330 V
CSR CSIR BOX	No
Starting Device Type	RELAY
Starting Device Description	MTRP-0029*
Overload Protection	T0186/G6

PERFORMANCE

TESTED CONDITIONS

Tested Refrigerant	R-290
Tested Application	HBP
Tested Standard	ASHRAE
Tested Cooling	Fan
Tested Voltage	220 V
Refrigerant Temperature	Dew

RATED POINTS

Condensing Temperature °C	Evaporating Temperature °C	Cooling Capacity W	Efficiency W/W	Power Consumption W	Current A	Gas Flow Rate kg/h
54.4	7.2	845	2.45	345	2.31	9.86

Test Condition: Subcooling 8.3 K, Return Gas 35 ºC. Data generated in accordance to EN 12900:2013 polynomial equation and tolerance guidelines.

PERFORMANCE CURVE

Condensing Temperature 35ºC

Evaporating Temperature °C	Cooling Capacity W	Efficiency W/W	Power Consumption W	Current A	Gas Flow Rate kg/h
-15	471	2.06	229	1.97	4.55
-10	574	2.37	242	2.00	5.57
-5	693	2.71	256	2.03	6.76
0	830	3.10	268	2.06	8.14
5	986	3.61	274	2.08	9.73
10	1163	4.30	270	2.11	11.56

Test Condition: Subcooling 8.3 K, Return Gas 35 ºC. Data generated in accordance to EN 12900:2013 polynomial equation and tolerance guidelines.

PERFORMANCE CURVE

Condensing Temperature 45ºC

Evaporating Temperature °C	Cooling Capacity W	Efficiency W/W	Power Consumption W	Current A	Gas Flow Rate kg/h
-15	415	1.64	254	2.01	4.34
-10	508	1.90	266	2.06	5.33
-5	615	2.17	283	2.11	6.49
0	739	2.46	301	2.15	7.84
5	881	2.79	316	2.19	9.42
10	1042	3.21	325	2.22	11.23

Test Condition: Subcooling 8.3 K, Return Gas 35 ºC. Data generated in accordance to EN 12900:2013 polynomial equation and tolerance guidelines.

PERFORMANCE CURVE

Condensing Temperature 55ºC

Evaporating Temperature °C	Cooling Capacity W	Efficiency W/W	Power Consumption W	Current A	Gas Flow Rate kg/h
-10	445	1.58	281	2.12	5.10
-5	539	1.82	297	2.18	6.22
0	650	2.05	317	2.24	7.54
5	777	2.30	338	2.29	9.08
10	922	2.59	356	2.34	10.87

Test Condition: Subcooling 8.3 K, Return Gas 35 ºC. Data generated in accordance to EN 12900:2013 polynomial equation and tolerance guidelines.

ENVELOPE

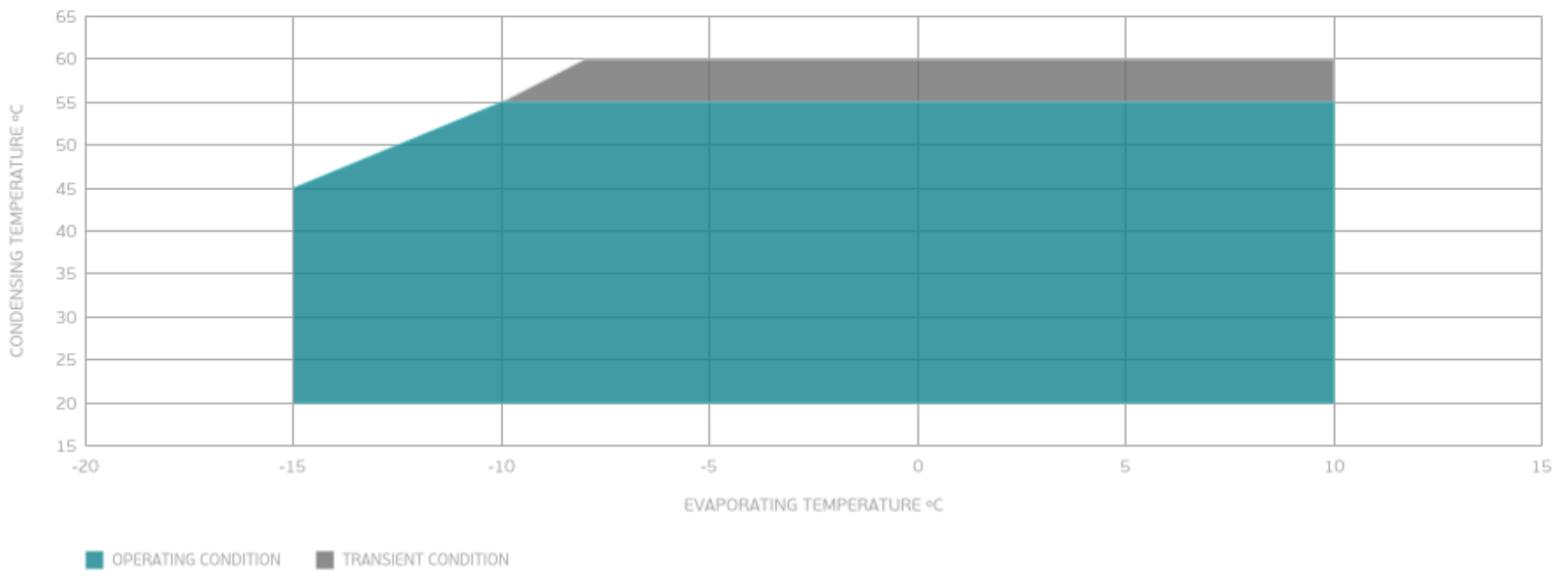

External

EXTERNAL CHARACTERISTICS

Base Plate	SMALL
Tray Holder	NO

Connector	Internal Diameter	Shape	Material
Suction	8.1 mm	SLANTED 42°	COPPER
Discharge	6.1 mm	STRAIGHT	COPPER
Process	6.1 mm	SLANTED 42°	COPPER

EXTERNAL DIMENSIONS

SHELL

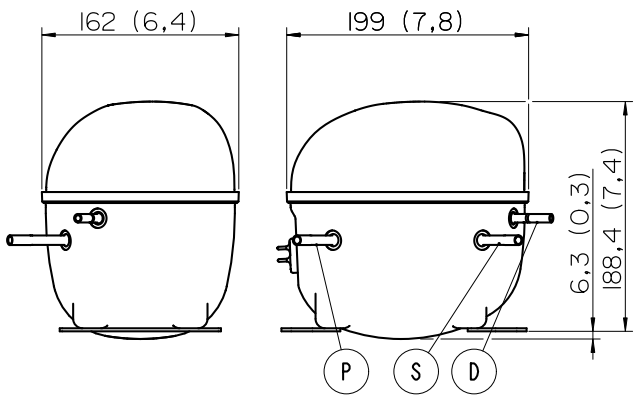

BASE

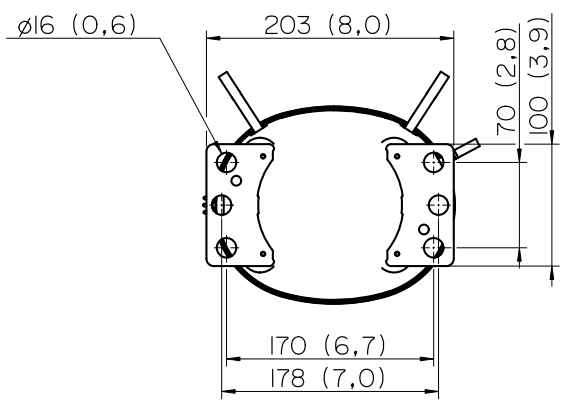

FENCE