COMPRESSOR TECHNICAL DATA

NEU6215GK

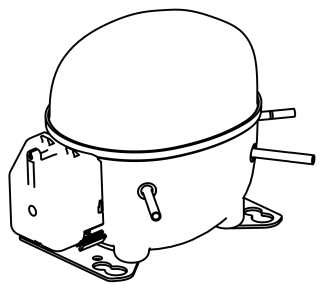

ENGINEERING CODE
959NA51

REFRIGERANT
R-404A

POWER SUPPLY
220-240 V 50 Hz

APPLICATION
MBP

MOTOR TYPE
CSCR

STANDARD
ASHRAE

COOLING CAPACITY
1199 W

EFFICIENCY
1.85 W/W

DATA

GENERAL DATA

Model	NEU6215GK
Type	Hermetic Reciprocating
Technology	ON/OFF
Compressor Application	MBP
Expansion Device	Capillary Tube or Expansion Valve
Compressor Cooling	Fan/220
HP	3/4
Starting Torque	HST
Plant	SLOVAKIA

ELECTRICAL DATA

Start Winding Resistance	14.26 Ω at 25°C
Run Winding Resistance	4.25 Ω at 25°C
Locked Rotor Amperage (LRA) 50Hz	22 A
Rated Load Amperage (LMBP) at 50 Hz	4.5 A

MECHANICAL DATA

Displacement	12.11 cm^3
Oil Charge	350 ml
Oil Type	ESTER
Oil Viscosity	ISO22
Weight	11.5 Kg

ELECTRICAL COMPONENTS

Start Capacitor	88-108 µf/330 V
Run Capacitor	10.0 µf/400 V
CSR CSIR BOX	Yes
Starting Device Description	RVA3AN3C-647
Overload Protection	T0634/G9

PERFORMANCE

TESTED CONDITIONS

Tested Refrigerant	R-404A
Tested Application	MBP
Tested Standard	ASHRAE
Tested Cooling	Fan
Tested Voltage	220 V
Refrigerant Temperature	Dew

RATED POINTS

Condensing Temperature °C	Evaporating Temperature °C	Cooling Capacity W	Efficiency W/W	Power Consumption W	Current A	Gas Flow Rate kg/h
54.4	-6.7	1199	1.85	648	3.19	32.73

Test Condition: Subcooling 8.3 K, Return Gas 35 ºC. Data generated in accordance to EN 12900:2013 polynomial equation and tolerance guidelines.

PERFORMANCE CURVE

Condensing Temperature 35ºC

Evaporating Temperature °C	Cooling Capacity W	Efficiency W/W	Power Consumption W	Current A	Gas Flow Rate kg/h
-20	947	2.16	439	2.22	20.56
-15	1172	2.42	484	2.40	25.61
-10	1428	2.67	534	2.60	31.40
-5	1719	2.93	586	2.81	38.04
0	2045	3.23	633	3.04	45.66
5	2410	3.58	673	3.28	54.37
10	2815	4.02	699	3.53	64.30

Test Condition: Subcooling 8.3 K, Return Gas 35 ºC. Data generated in accordance to EN 12900:2013 polynomial equation and tolerance guidelines.

PERFORMANCE CURVE

Condensing Temperature 45ºC

Evaporating Temperature °C	Cooling Capacity W	Efficiency W/W	Power Consumption W	Current A	Gas Flow Rate kg/h
-20	803	1.67	479	2.35	19.25
-15	1003	1.91	525	2.57	24.21
-10	1232	2.12	582	2.81	29.93
-5	1492	2.31	647	3.06	36.54
0	1785	2.50	713	3.32	44.15
5	2113	2.72	778	3.60	52.88
10	2479	2.97	836	3.88	62.85

Test Condition: Subcooling 8.3 K, Return Gas 35 ºC. Data generated in accordance to EN 12900:2013 polynomial equation and tolerance guidelines.

PERFORMANCE CURVE

Condensing Temperature 55ºC

Evaporating Temperature °C	Cooling Capacity W	Efficiency W/W	Power Consumption W	Current A	Gas Flow Rate kg/h
-10	1041	1.72	605	3.02	28.44
-5	1267	1.88	674	3.31	34.96
0	1523	2.03	751	3.62	42.51
5	1812	2.18	833	3.94	51.22
10	2135	2.34	913	4.27	61.19

Test Condition: Subcooling 8.3 K, Return Gas 35 ºC. Data generated in accordance to EN 12900:2013 polynomial equation and tolerance guidelines.

ENVELOPE

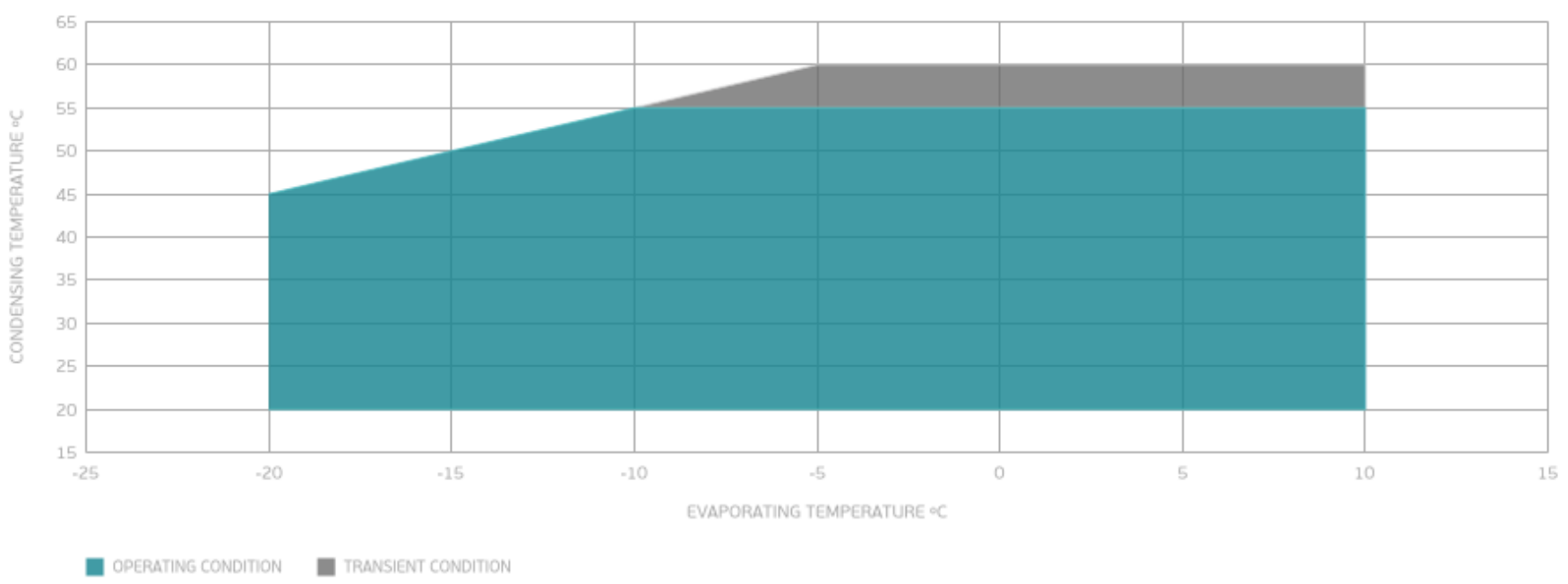

External

EXTERNAL CHARACTERISTICS

Base Plate	SMALL
Tray Holder	NO

Connector	Internal Diameter	Shape	Material
Suction	8.1 mm	SLANTED 42°	COPPER
Discharge	6.1 mm	STRAIGHT	COPPER

Process	6.1 mm	SLANTED 42°	COPPER

EXTERNAL DIMENSIONS

SHELL

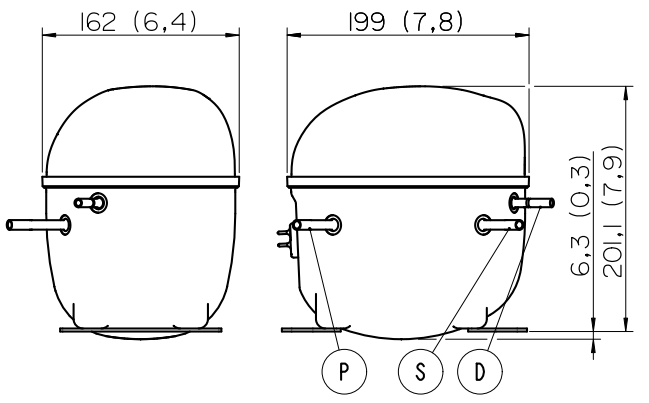

BASE

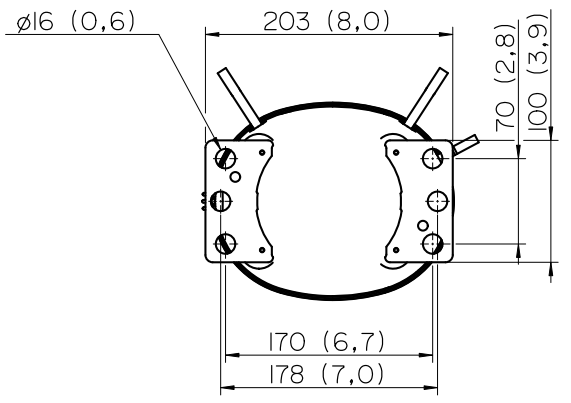
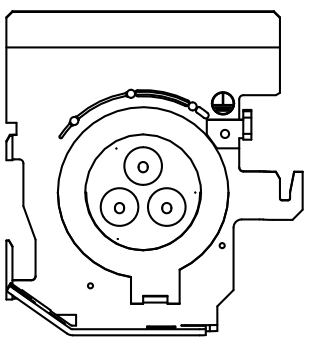
FENCE